FIRST ISSUE																		A
Modifications	DRAFT.	CHECK.	ENGIN.	DATE														
STATUS	REVISIONS																	
PRELIMINARY	A																	
FOR LAYOUT																		
FOR CONSTRUCTION																		
FOR CONSTRUCTION EXCEPT HOLD																		
RECORD ISSUE																		
					CMI PROJ	A.Q.	R.BO	CN/AC	SUB SUPPLIER	CMI SITE	ERECTOR	ALSTOM	M.De	Agent				REVISION
					DISTRIBUTION													

TermoRio S.A.

Geraçao Termelétrica

ALSTOM

E/01/16.0603	ISO			Engineer		
ORDER N°		Matieral	Weight Unit.			
Destination	TERMORIO COMBINED CYCLE POWER STATION			Checker	Delhaye	
				Draftman	Delhaye	
					Name	Signature

Designation

HRSG Temperature Sensor

Data Sheet

Cmi

This drawing and the design it covers are the property of C.M.I.. They are merely loaned and on the borrower's express agreement that they will not be reproduced, copied, loaned ,exhibited or used, except in the limited way and private use permitted by any written consent given by C.M.I. to the borrower.

N° Draw 66064/71E15/0

Scale : Sheet: /

ISA Code	BGA Nr	Quantity per boiler	PIPE MATERIAL	PIPE	WELL MATERIAL	1"1/4 NPT TW "U" mm	Ind Range End °C	Remark
TE + TW	719030	6	---------	CASING	253 MA	L3=1300	---------	
TE + TW	719032	10	SA106GrB	323,9-25CC	SA-479-321H	4.5 " (114.3mm)	---------	
TI + CAPIL + TW	719040	1	SA106GrB	323,9-25CC	SA-479-321H	4.5 " (114.3mm)	200	WITH CAPILLARY
TI + CAPIL + TW	719041	1	SA106GrB	355,6	SA-479-321H	4.5 " (114.3mm)	400	WITH CAPILLARY
TI + CAPIL + TW	719043	1	SA335P91	355,6-25AF	SA-479-321H	4.5 " (114.3mm)	600	WITH CAPILLARY
			MANTEL LENGTH	**CABLE LENGTH**				
			mm	mm				
	719050	1	3000	4800				
	719051	2	3000	8500				
	719052	2	3000	12000				
	719053	2	3000	15500				
	719054	1	4050	4800				
	719055	2	4050	8500				
	719056	2	4050	12000				
	719057	2	4050	15500				
	719058	1	5650	4800				
	719059	2	5650	8500				
	719060	2	5650	12000				
	719061	2	5650	15500				
			PLUG					
	719035	1	1"1/4 NPT M PLUG					

SPARE FOR 2 BOILERS								
TE + TW	719530	1	---	CASING	253 MA	L3=1300	---	
TE + TW	719532	1	SA106GrB	323,9-25CC	SA-479-321H	4.5 " (114.3mm)	---	
TI + CAPIL + TW	719543	1	SA335P91	355,6-25AF	SA-479-321H	4.5 " (114.3mm)	600	WITH CAPILLARY
			MANTEL LENGTH	**CABLE LENGTH**				
	719553	1	3000	15500	INCONEL			
	719557	1	4050	15500	INCONEL			
	719561	1	5650	15500	INCONEL			

ISA Code	KKS1	KKS2	REQ Nr	Short Description	PIPE MATERIAL	PIPE	WELL MATERIAL	1"1/4 NPT TW "U" mm	Ind Range End °C	Fluid	T Design (°C)	Remark
TE/TW	HAC50	CT001	719032	T HP FW IN ECO	SA106GrB	323,9-25CC	SA-479-321H	4.5 " (114.3mm)	---------	WATER	180	
TE/TW	HAC51	CT001	719032	T HP ECO OUT	SA106GrB	355,6	SA-479-321H	4.5 " (114.3mm)	---------	WATER	356	
~~TE/TW~~	~~HAC51~~	~~CT002~~	~~719031~~	~~T HP FW TO GT CLR~~	~~SA106GrB~~	~~(88,9)114,3-25CC~~	~~SA-479-321H~~	~~2.5" (63.5mm)~~	~~---------~~	~~WATER~~	~~356~~	
TE/TW	HAD50	CT002	719032	T HP CIRC W	SA106GrB	610-15CD	SA-479-321H	4.5 " (114.3mm)	---------	WATER	348	
~~TE/TW~~	~~HAD50~~	~~CT010~~	~~---------~~	~~T HP STUP MECH SEAL~~	~~---------~~	~~PUMP~~	~~---------~~	~~---------~~	~~---------~~	~~WATER~~	~~352~~	
~~TE/TW~~	~~HAD50~~	~~CT011~~	~~---------~~	~~T HP STUP MECH SEAL~~	~~---------~~	~~PUMP~~	~~---------~~	~~---------~~	~~---------~~	~~WATER~~	~~352~~	
TE/TW	HAH50	CT001	719032	T HP SUPHTD STM	SA335P11	355,6-15AE	SA-479-321H	4.5 " (114.3mm)	---------	STM	470	
TE/TW	HAH50	CT002	719032	T HP SUPHTD STM	SA335P11	355,6-15AE	SA-479-321H	4.5 " (114.3mm)	---------	STM	470	
~~TE/TW~~	~~HAH50~~	~~CT003~~	~~719031~~	~~T HP STM FROM GT CLR~~	~~SA335P22~~	~~114,3-25AH~~	~~SA-479-321H~~	~~2.5" (63.5mm)~~	~~---------~~	~~STM~~	~~534~~	
TE/TW	HAH51	CT001	719032	T HP DESUPHTD STM	SA335P11	355,6-15AE	SA-479-321H	4.5 " (114.3mm)	---------	STM	435	
TE/TW	HAH51	CT002	719032	T HP DESUPHTD STM	SA335P11	355,6-15AE	SA-479-321H	4.5 " (114.3mm)	---------	STM	435	
TE/TW	HAH52	CT001	719032	T HP STM	SA335P91	355,6-25AF	SA-479-321H	4.5 " (114.3mm)	---------	STM	572	
TE/TW	HAH52	CT002	719032	T HP STM	SA335P91	355,6-25AF	SA-479-321H	4.5 " (114.3mm)	---------	STM	572	
TE/TW	HAH52	CT003	719032	T HP STM	SA335P91	355,6-25AF	SA-479-321H	4.5 " (114.3mm)	---------	STM	572	
TE/TW	HBK10	CT010	See MANTEL	FGAS IN BLR GRID T	---------	MANTEL	INCONEL 600	mantel xxxx mm	---------	FGAS	850	
TE/TW	HBK10	CT011	See MANTEL	FGAS IN BLR GRID T	---------	MANTEL	INCONEL 600	mantel xxxx mm	---------	FGAS	850	
TE/TW	HBK10	CT012	See MANTEL	FGAS IN BLR GRID T	---------	MANTEL	INCONEL 600	mantel xxxx mm	---------	FGAS	850	
TE/TW	HBK10	CT013	See MANTEL	FGAS IN BLR GRID T	---------	MANTEL	INCONEL 600	mantel xxxx mm	---------	FGAS	850	
TE/TW	HBK10	CT014	See MANTEL	FGAS IN BLR GRID T	---------	MANTEL	INCONEL 600	mantel xxxx mm	---------	FGAS	850	
TE/TW	HBK10	CT015	See MANTEL	FGAS IN BLR GRID T	---------	MANTEL	INCONEL 600	mantel xxxx mm	---------	FGAS	850	
TE/TW	HBK10	CT016	See MANTEL	FGAS IN BLR GRID T	---------	MANTEL	INCONEL 600	mantel xxxx mm	---------	FGAS	850	
TE/TW	HBK10	CT017	See MANTEL	FGAS IN BLR GRID T	---------	MANTEL	INCONEL 600	mantel xxxx mm	---------	FGAS	850	
TE/TW	HBK10	CT018	See MANTEL	FGAS IN BLR GRID T	---------	MANTEL	INCONEL 600	mantel xxxx mm	---------	FGAS	850	
TE/TW	HBK10	CT019	See MANTEL	FGAS IN BLR GRID T	---------	MANTEL	INCONEL 600	mantel xxxx mm	---------	FGAS	850	
TE/TW	HBK10	CT020	See MANTEL	FGAS IN BLR GRID T	---------	MANTEL	INCONEL 600	mantel xxxx mm	---------	FGAS	850	
TE/TW	HBK10	CT021	See MANTEL	FGAS IN BLR GRID T	---------	MANTEL	INCONEL 600	mantel xxxx mm	---------	FGAS	850	
TE/TW	HBK10	CT022	See MANTEL	FGAS IN BLR GRID T	---------	MANTEL	INCONEL 600	mantel xxxx mm	---------	FGAS	850	
TE/TW	HBK10	CT023	See MANTEL	FGAS IN BLR GRID T	---------	MANTEL	INCONEL 600	mantel xxxx mm	---------	FGAS	850	
TE/TW	HBK10	CT024	See MANTEL	FGAS IN BLR GRID T	---------	MANTEL	INCONEL 600	mantel xxxx mm	---------	FGAS	850	
TE/TW	HBK10	CT025	See MANTEL	FGAS IN BLR GRID T	---------	MANTEL	INCONEL 600	mantel xxxx mm	---------	FGAS	850	
TE/TW	HBK10	CT026	See MANTEL	FGAS IN BLR GRID T	---------	MANTEL	INCONEL 600	mantel xxxx mm	---------	FGAS	850	
TE/TW	HBK10	CT027	See MANTEL	FGAS IN BLR GRID T	---------	MANTEL	INCONEL 600	mantel xxxx mm	---------	FGAS	850	
TE/TW	HBK10	CT028	See MANTEL	FGAS IN BLR GRID T	---------	MANTEL	INCONEL 600	mantel xxxx mm	---------	FGAS	850	
TE/TW	HBK10	CT029	See MANTEL	FGAS IN BLR GRID T	---------	MANTEL	INCONEL 600	mantel xxxx mm	---------	FGAS	850	
TE/TW	HBK10	CT030	See MANTEL	FGAS IN BLR GRID T	---------	MANTEL	INCONEL 600	mantel xxxx mm	---------	FGAS	850	
TE/TW	HBK10	CT031	719030	FGAS OUT HP1 SUPHTR	---------	CASING	253 MA	L3=1300	---------	FGAS	620	
TE/TW	HBK10	CT032	719030	T FGAS OUT HP EVAPO	---------	CASING	253 MA	L3=1300	---------	FGAS	350	
TE/TW	HBK10	CT033	719030	T FGAS OUT BLR	---------	CASING	253 MA	L3=1300	---------	FGAS	150	
TE/TW	HBK10	CT034	719030	T FGAS OUT BLR	---------	CASING	253 MA	L3=1300	---------	FGAS	150	

ISA Code	KKS1	KKS2	REQ Nr	Short Description	PIPE MATERIAL	PIPE	WELL MATERIAL	1"1/4 NPT TW "U" mm	Ind Range End °C	Fluid	T Design (°C)	Remark
~~TE/TW~~	~~HJA10~~	~~CT001~~	~~---------~~	~~BNR FUGAS TE~~	---------	~~BY R&V~~	~~---------~~	~~---------~~	---------	~~FUGAS~~	~~50~~	
TE/TW	HNA10	CT001	719030	T FGAS OUT GT	---------	CASING	253 MA	L3=1300	---------	FGAS	850	
TE/TW	HNA10	CT002	719030	T FGAS OUT GT	---------	CASING	253 MA	L3=1300	---------	FGAS	850	
TI/TW	HAC50	CT101	719040	HP FW IN ECO TI	SA106GrB	323,9-25CC	SA-479-321H	4.5 " (114.3mm)	200	WATER	180	WITH CAPILLARY 2.5 m
TI/TW	HAC51	CT101	719041	HP ECO OUT TI	SA106GrB	355,6	SA-479-321H	4.5 " (114.3mm)	400	WATER	356	WITH CAPILLARY 2.5 m
~~TI/TW~~	~~HAC51~~	~~CT102~~	~~719042~~	~~HP FW TO GT CLR TI~~	~~SA106GrB~~	~~(88,9)114,3-25CC~~	~~SA-479-321H~~	~~2.5" (63.5mm)~~	~~400~~	~~WATER~~	~~356~~	
TI/TW	HAH52	CT101	719043	HP STM TI	SA335P91	355,6-25AF	SA-479-321H	4.5 " (114.3mm)	600	STM	572	WITH CAPILLARY 2.5 m
~~TI/TW~~	~~HJA10~~	~~CT101~~	~~---------~~	~~BRN FUGAS TI~~	~~---------~~	~~---------~~	~~---------~~	~~---------~~	~~100~~	~~FUGAS~~	~~50~~	~~ON BNR SKID~~
~~TI/TW~~	~~HJA20~~	~~CT102~~	~~---------~~	~~BNR SCRUB IN TI~~	~~---------~~	~~---------~~	~~---------~~	~~---------~~				
~~TI/TW~~	~~HJA20~~	~~CT103~~	~~---------~~	~~BNR SCRUB OUT TI~~	~~---------~~	~~---------~~	~~---------~~	~~---------~~				

MAIN SPECIFICATIONS ACCORDING TO 1AHA011678

THERMOCOUPLE (TC)	
Type	K (NiCr-Ni) compensation Jaune + / Blanc - / Ext Jaune
Wiring	Two wires type
Accuracy	"+/- 2.2 °C or +/- 0.0075.T (whichever is greater)
Applicable code	ANSI - MC96.1

Double type of thermocouples shall be used.

Transmitters are located in separate intermediate junction boxes.

Nipple length 200 mm; 1/2"NPT male on thermowell side and 1/2"BSPP on connecting head side

All mantel thermocouples with cable extension

BGA	System KKS	Numero KKS	RAW	LEFT	MIDDLE	RIGHT	Mantel	Cable
TBA			Front to back	Left	Middle	Right	length (mm)	length (mm)
719053	HBK10	CT010	1				3000	15500
719057	HBK10	CT011	1				4050	15500
719061	HBK10	CT012	1				5650	15500
719052	HBK10	CT013	2				3000	12000
719056	HBK10	CT014	2				4050	12000
719060	HBK10	CT015	2				5650	12000
719051	HBK10	CT016	3				3000	8500
719055	HBK10	CT017	3				4050	8500
719059	HBK10	CT018	3				5650	8500
719050	HBK10	CT019	4				3000	4800
719054	HBK10	CT020	4				4050	4800
719058	HBK10	CT021	4				5650	4800
719051	HBK10	CT022	5				3000	8500
719055	HBK10	CT023	5				4050	8500
719059	HBK10	CT024	5				5650	8500
719052	HBK10	CT025	6				3000	12000
719056	HBK10	CT026	6				4050	12000
719060	HBK10	CT027	6				5650	12000
719053	HBK10	CT028	7				3000	15500
719057	HBK10	CT029	7				4050	15500
719061	HBK10	CT030	7				5650	15500

ALSTOM	Revision: -	Language en	Pages 5/6	Doc.-No. 1AHA020045

4.3. Dimensions for Standard Thermowells in all Systems (except Main and Secondary Cooling Water System)

This chapter describes two different types of screwed thermowells. The thermowell with the insertion length 2.5" shall be used in pipes with a nominal size up to and including (≤) DN6". Thermowells with insertion length of 4.5" shall be used in pipes with nominal sizes exceeding (>) DN6". Materials for these thermowells shall be SA-479-321H.

4.3.1. Pipe Extension for Pipes smaller than (<) DN4"

Some temperature measurement points are located in pipes with DN2" or DN3". These pipes have to be interrupted and fit out with a DN4" pipe extension.

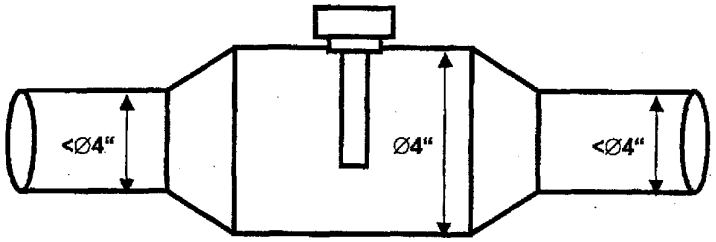

Figure 1: DN4" Pipe extension

Due to the pipe extension the thermowell cannot be screwed into the opposite pipe wall. The mechanical strength of the pipe is ensured.

4.3.2. Standard Thermowell for Pipe Sizes up to and including (≤) DN6"

	Measure
U	2.5"
L	4.25"
Y	1" NPT
X	0.5" NPSM
Material	SA-479-321H

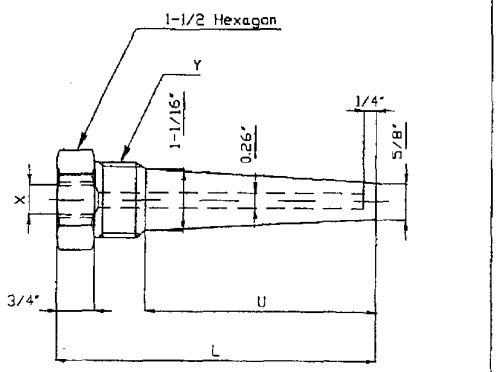

We reserve all rights in this document and in the information contained therein. Reproduction, use or disclosure to third parties without express authority is strictly forbidden. © ALSTOM (Switzerland) Ltd 2001
Form: Spec_english.dot, GCA/Rev. A 2001-01-09
PRINT DATE: 01-02-21

ALSTOM	Revision: -	Language: en	Page: 6/6	Doc.-No. 1AHA020045

4.3.3. Standard Thermowell for Pipe Sizes exceeding (>) DN6"

	Measure
U	4.5"
L	6.25"
Y	1" NPT
X	0.5" NPSM
Material	SA-479-321H

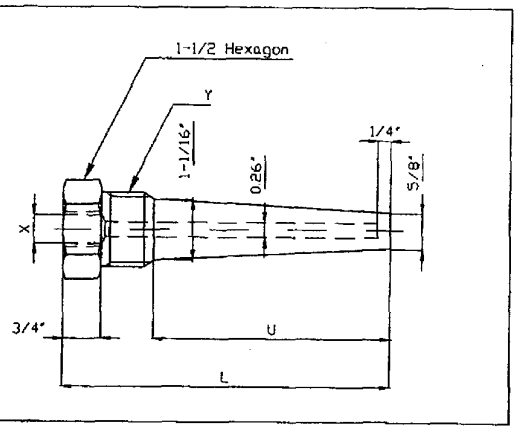

5. REFERENCE DOCUMENTS

- IEC 61520: Metal Thermowells for Thermometer Sensors – Functional Dimensions
- ASME PTC 19.3: Temperature Measurement
- ANSI-MC96.1: Temperature Measurement Thermocouples
- Drawing 1AHA 018 284 Standard Thermowells according to ANSI
- Drawing 1AHA 019 191 Standard flanged Thermowells according to ANSI

We reserve all rights in this document and in the information contained therein. Reproduction, use or disclosure to third parties without express authority is strictly forbidden. © ALSTOM (Switzerland) Ltd 2001
Form: Spec_engfish.dot, GCA/Rev. A 2001-01-09
PRINT DATE: 01-02-21

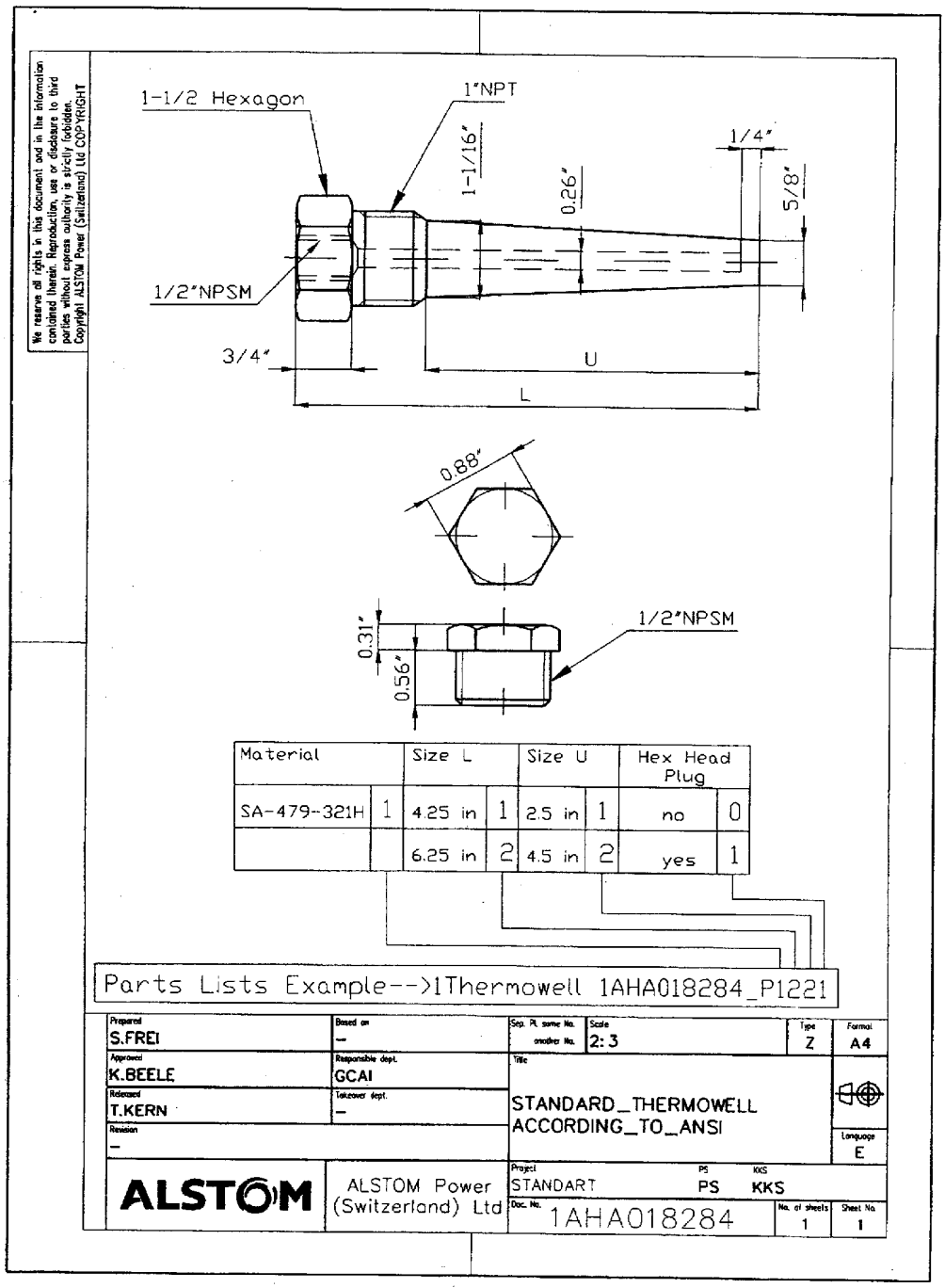

Material		Size L		Size U		Hex Head Plug	
SA-479-321H	1	4.25 in	1	2.5 in	1	no	0
		6.25 in	2	4.5 in	2	yes	1

Parts Lists Example-->1Thermowell 1AHA018284_P1221

Prepared: S.FREI	Based on: –	Sep. Pl. same No. / another No.	Scale: 2: 3	Type: Z	Format: A4
Approved: K.BEELE	Responsible dept.: GCAI	Title: STANDARD_THERMOWELL ACCORDING_TO_ANSI			
Released: T.KERN	Takeover dept.: –				Language: E
Revision: –					
ALSTOM	ALSTOM Power (Switzerland) Ltd	Project: STANDART	PS: PS	KKS: KKS	
		Doc. No.: 1AHA018284		No. of sheets: 1	Sheet No.: 1